STOD1812

Power supply for PMOLED display panel

Features

- Synchronous step-up converter
- Input voltage range from 2.5 V to 5.5 V
- Maximum output current 120 mA
- Efficiency: 75 % at I_O = 10 mA - 30 mA; 85 % at I_O = 30 mA - 120 mA
- Switching at 1.2 MHz in typical application conditions
- Enable pin for shutdown mode
- True load disconnect
- Soft-start to limit inrush current
- UVLO protection
- Adjustable output voltage up to 20 V
- Low quiescent current: < 1 µA in shutdown mode
- Over-temperature protection
- Package: DFN10L 3x3 mm, 0.8 mm
- Operating junction temperature range: -40 °C to 125 °C

Applications

- Passive matrix OLED power supplies
- Mobile phones
- PDAs
- Camcorders
- Digital still cameras

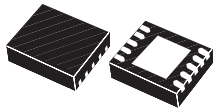

DFN10L (3x3 mm)

Description

STOD1812 is a step-up converter designed to power passive matrix OLED (PMOLED) displays, providing the pre-charge and biasing voltage of the column matrix driver. STOD1812 uses a pulsed frequency modulation (PFM) control mode technique. The high switching frequency makes it possible to reduce the value and size of the external components. This device is particularly suitable for battery-operated applications, where overall system efficiency is the major concern.

Synchronous rectification has been integrated in the device in order to eliminate the external Schottky diode. An internal compensation net is also integrated, enabling the STOD1812 to provide excellent load transient performance in addition to good load regulation.

The output voltage is set using two external resistors. Over-temperature protection and under-voltage lockout (UVLO) functions are integrated in the device. An additional switch implements a true load disconnection feature which stops the currrent flowing from the input when the device is in shutdown mode. The EN pin turns off the device, reducing the quiescent current to 0.1 µA.

Table 1. Device summary

Order code	Package	Packaging
STOD1812PUR	DFN10L (3x3 mm)	3000 parts per reel

Contents

1 Diagram 3

2 Pin configuration 4

3 Maximum ratings 5

4 Electrical characteristics 6

5 Functional description 8

5.1 Boost controller 8

5.2 Enable 8

5.3 Efficiency 8

5.4 Under voltage lockout (UVLO) 8

6 Typical application information 9

7 Demonstration board 10

8 Typical application performance 11

9 Package mechanical data 13

10 Revision history 18

1 Diagram

Figure 1. Internal block diagram

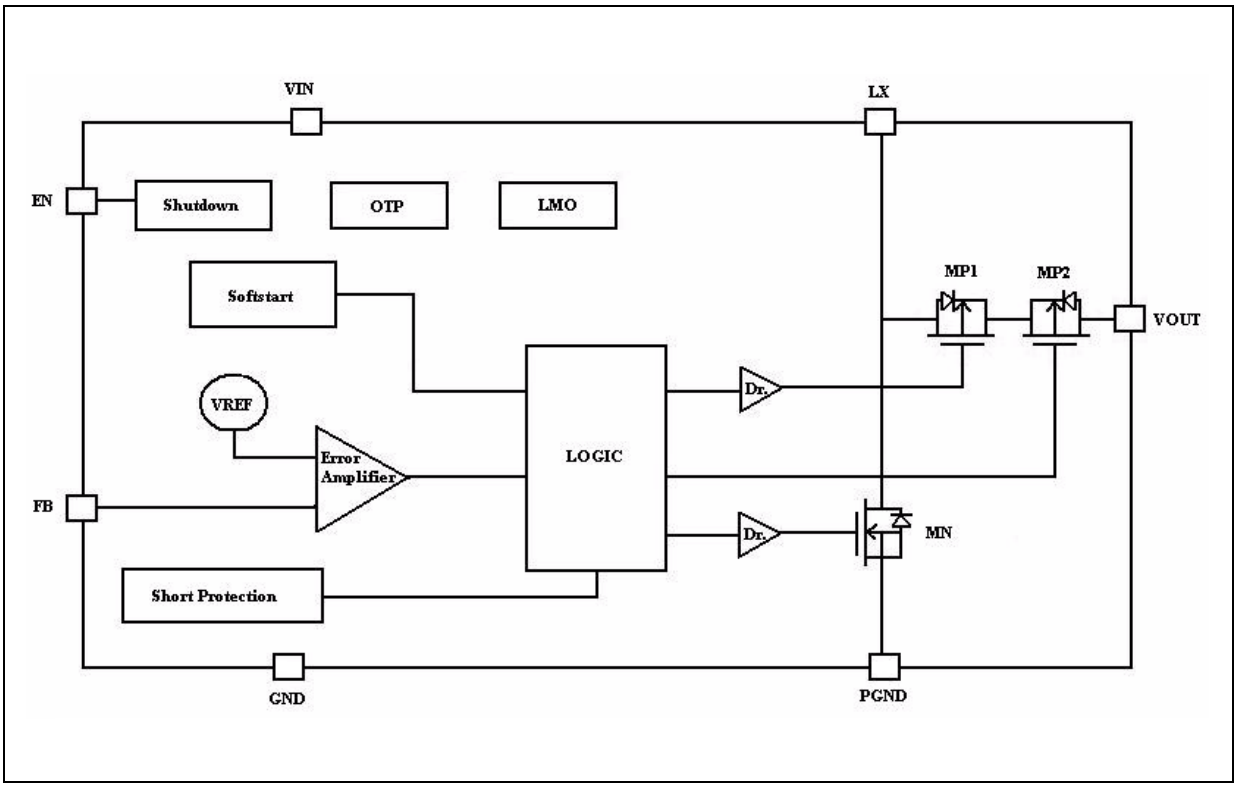

Figure 2. Schematic diagram

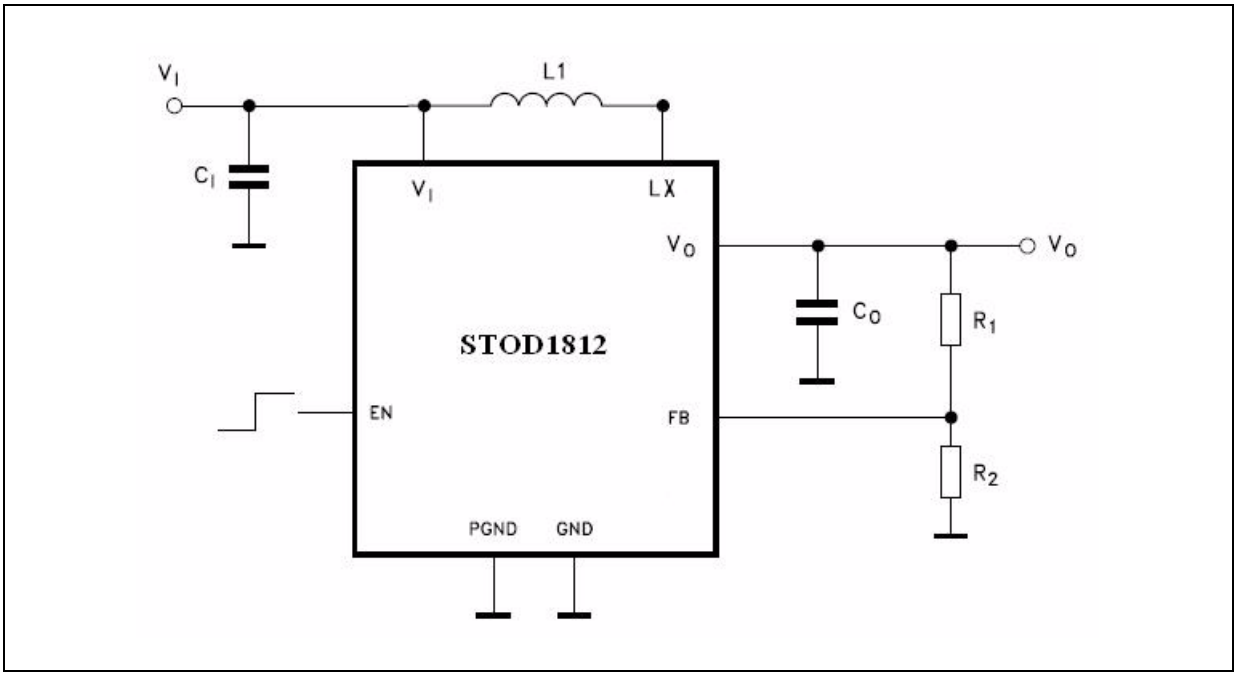

2 Pin configuration

Figure 3. Pin connections (top view)

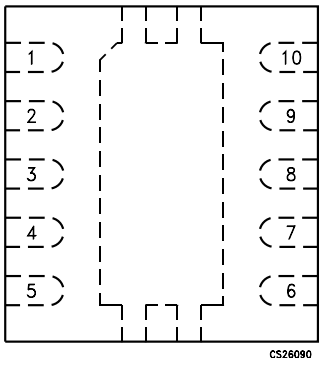

Table 2. Pin description

Pin n°	Symbol	Description
1	OUT	Output voltage
2	OUT	Output voltage
3	GND	Ground
4	FB	Feedback
5	EN	DC supply voltage enable control pin. ON $=V_I$. When pulled low put the device in shutdown mode.
6	V_I	Input supply voltage.
7	L_X	Switching node
8	L_X	Switching node
9	PGND	Power ground
10	PGND	Power ground
	Exp Pad	Exposed Pad. It must be connected to power ground

3 Maximum ratings

Table 3. Absolute maximum ratings

Symbol	Parameter	Value	Unit
V_I	DC supply voltage	-0.3 to 6	V
EN	Enable pin	-0.3 to 6	V
FB	Feedback pin	-0.3 to 6	V
L_X	Switching node	-0.3 to 20	V
I_{LX}	Switching current	Internally limited	A
V_{OUT}	Converter output voltage	-0.3 to 20	V
P_D	Power dissipation	Internally limited	mW
T_{STG}	Storage temperature range	-65 to 150	°C
T_J	Operating temperature range	-40 to 125	°C

Table 4. Thermal data

Symbol	Parameter	Value	Unit
R_{thJA}	Thermal resistance junction-ambient (tested on 2 layers board)	30.9	°C/W

Table 5. ESD data

Symbol	Parameter	Value	Unit
ESD	Human Body Model	2	kV

4 Electrical characteristics

Table 6. Electrical characteristics
(T_J = -40 °C to 125 °C, V_I = 3.6 V, C_I = C_O = 4.7 µF, L = 2.2 µH, I_O = 80 mA, V_{EN} = V_I, V_O = 18 V, R_1=270 kΩ, R_2 = 20 kΩ unless otherwise specified).

Symbol	Parameter	Test conditions	Min.	Typ.	Max.	Unit
Supply section						
V_I	Supply input voltage	I_O=0 to 120mA	2.5		5.5	V
I_O	Load current	V_I=2.5V to 5.5V	120			mA
UVLO_H	Under voltage lockout HIGH			2.3	2.4	V
UVLO_L	Under voltage lockout LOW		2.1	2.2		V
I_Q	Quiescent current	I_O=120mA		1.3		mA
		No Load, Switching		0.3		mA
		V_{FB}=V_I - No Load, No Switching		35	50	µA
		V_{EN} =GND		100	300	nA
V_{EN} H	Enable high threshold	V_I=2.5V to 5.5V	1.2			V
V_{EN} L	Enable low threshold	V_I=2.5V to 5.5V			0.4	V
I_{EN}	Enable input current	V_{EN}=Vi			500	nA
Dynamic performance						
$T_{ON\ MAX}$	T_{ON} max time			0.5		µs
T_{SS}	Soft-start time	From enable to output regulation		0.6		ms
D_{MAX}	Maximum duty cycle			95		%
ν	Efficiency	I_O=5 to 30mA		75		%
		I_O=30 to 120mA		85		%
Step-up converter section						
V_{FB1}	Feedback voltage	V_I=2.5V to 5.5V	1.18	1.21	1.24	V
I_{FB}	Feedback leakage current	V_I=2.5V to 5.5V		30	100	nA
V_{O_MAX}	Output voltage range	V_I=2.5V to 5.5V; I_O=0 to 120mA	18			V
ΔV_{O_SLI}	Static line regulation	V_I=2.5V to 5.5V, I_{O1}=120mA,		0.6		%/V
ΔV_{O_SLO}	Static load regulation	I_O=0 to 120mA, V_I=3.6V;		0.0016		%/mA
ΔV_{O_LIT}	Line transient regulation	V_I=2.5V to 3.0V, I_{O1}=120mA, T_R=T_F=50µs T_A=25°C		80		mV
ΔV_{O_LOT}	Load transient regulation	I_O=5 to 120mA and I_O=120 to 5mA, T_R=T_F=10µs T_A=25°C, peak to peak		250		mV

Table 6. Electrical characteristics (continued)
(T_J = -40 °C to 125 °C, V_I = 3.6 V, C_I = C_O = 4.7 µF, L = 2.2 µH, I_O = 80 mA, V_{EN} = V_I, V_O = 18 V, R_1=270 kΩ, R_2 = 20 kΩ unless otherwise specified).

Symbol	Parameter	Test conditions	Min.	Typ.	Max.	Unit
SVR	Supply voltage rejection	I_O=5 to 120mA at 200Hz-Pulse 0.5V_{PP} TDMA noise standard, T_A=25°C see *Figure 14*		40		mV
I_{PK}	Inductor peak current	T_A=25°C		2.4		A
$R_{DSON}P$	Resistance on P-channel			0.60	0.80	Ω
$R_{DSON}N$	Resistance on N-channel			0.25	0.65	Ω
Thermal shutdown						
OTP	Over temperature protection			150		°C
OTP_{HYST}	Over temperature protection hysteresis			20		°C

5 Functional description

5.1 Boost controller

STOD1812 is a boost converter operating in PFM (pulsed frequency modulation) mode. The converter monitors the output voltage through the bridge resistor divider R_1 and R_2, and when the feedback voltage falls below the feedback voltage, the boost switch t_{SW} turns on and the inductor current ramps up. The inductor current is measured by detecting the temperature compensated drain voltage of the boost MOSFET. The boost turns off when its drain voltage reaches the internal reference, the main switch remains off until the minimum off time has passed and the feedback voltage is below the reference again. A maximum ON time prevents the switch t_{SW} from staying ON for an excessively long period.

In order to calculate the values of the bridge resistors with a fixed V_O, the following formula can be used:

$$\frac{V_O}{1,21} - 1 = \frac{R_1}{R_2}$$

5.2 Enable

The ENABLE pin is a logic input signal that turns on the controller when the voltage on this pin is equal to or higher than 1.2 V. When the voltage is at or below 0.4 V the STOD1812 goes into shutdown mode. In this case, the true-shutdown switch is turned off and the overall power consumption is reduced to 0.1 µA. No pull-up or pull-down is present on this pin.

5.3 Efficiency

The total consumption of some PMOLED displays can be as low as 1 mA. In order to increase the battery life of the device, the STOD1812 offers high efficiency over a wide range of output load current and input voltages. See typical application efficiency performance in *Section 8 on page 11*.

5.4 Under voltage lockout (UVLO)

The minimum supply voltage is 2.5 V, under which the undervoltage lockout circuit operates with a typical threshold of 2.3 V.

6 Typical application information

Figure 4. Typical application circuit connections

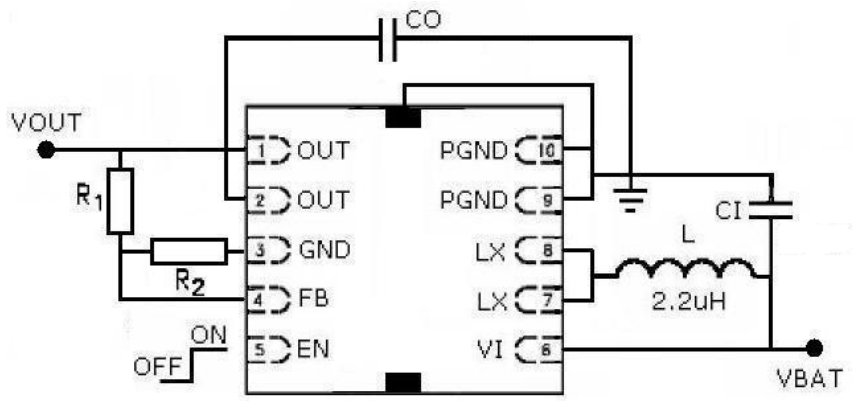

Table 7. External components

Symbol	Parameter	Min.	Typ.	Max.	Unit
L	Inductor (I_{SAT} = 2.5 A)		2.2		µH
C_I	Ceramic capacitor SMD		4.7		µF
C_O	Ceramic capacitor SMD		4.7		µF
R1	Feedback resistor (for V_O = 18 V)		270		kΩ
R2	Feedback resistor (for V_O = 18 V)		20		kΩ

Note: The external components suggested in this document should be considered as a design reference guide. The performance data mentioned in the electrical characteristics table are not guaranteed for all the possible electrical parameters of the components included in this list. However, the operation of STOD1812 is not limited to the use of components included in this list.

7 Demonstration board

Figure 5. Demonstration board photo

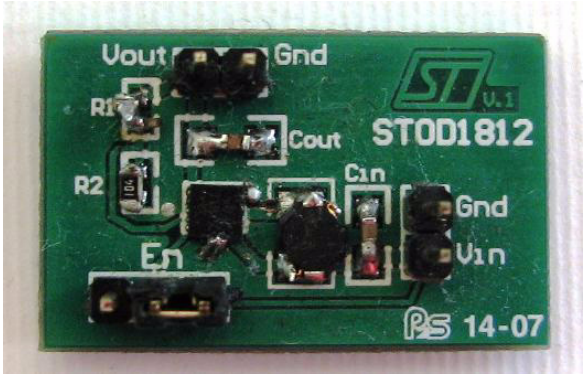

Figure 6. Suggested demonstration board schematic (top layer view)

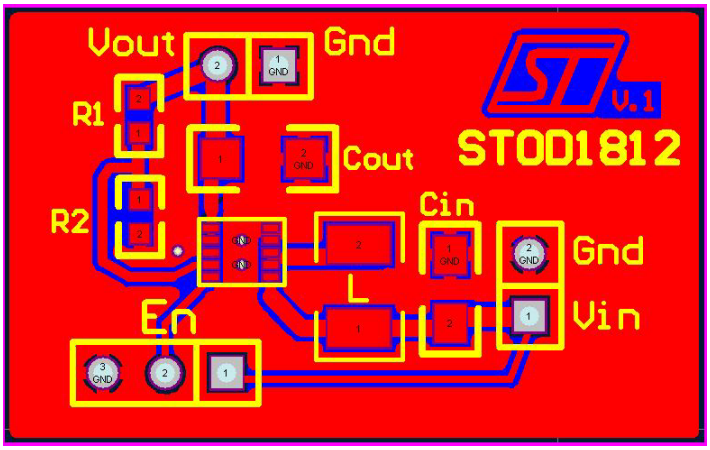

Figure 7. Suggested demonstration board schematic (bottom layer view)

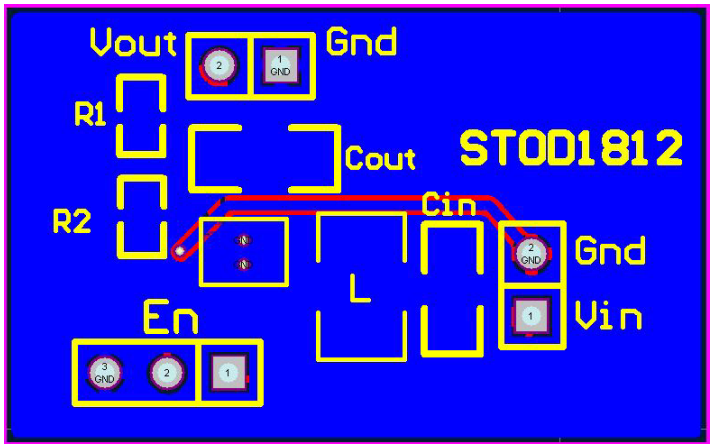

8 Typical application performance

(V_O = 18 V, L = 2.2 µH, C_I = C_O = 4.7 µF, R_1 = 270 kΩ, R_2 = 20 kΩ)

Figure 8. Efficiency vs output current

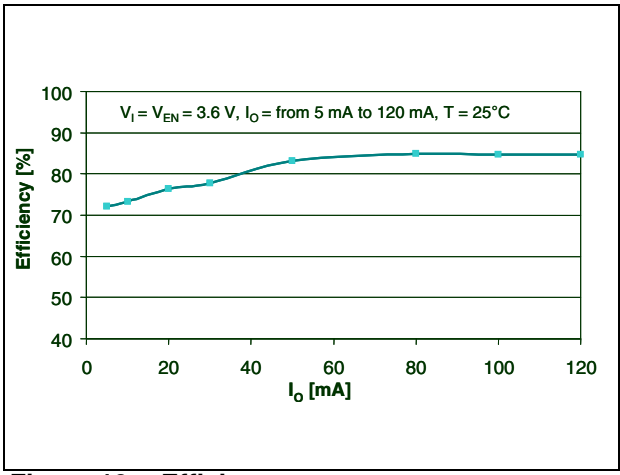

Figure 9. Efficiency vs input voltage

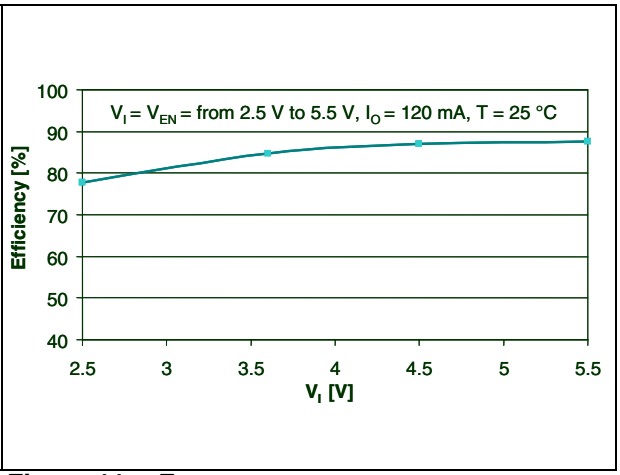

Figure 10. Efficiency vs temperature

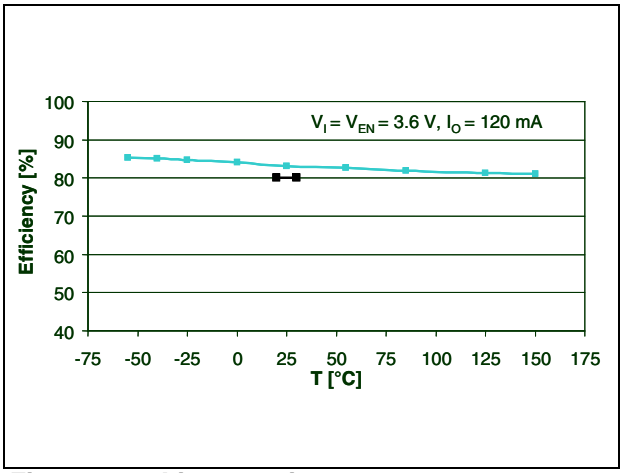

Figure 11. Frequency vs temperature

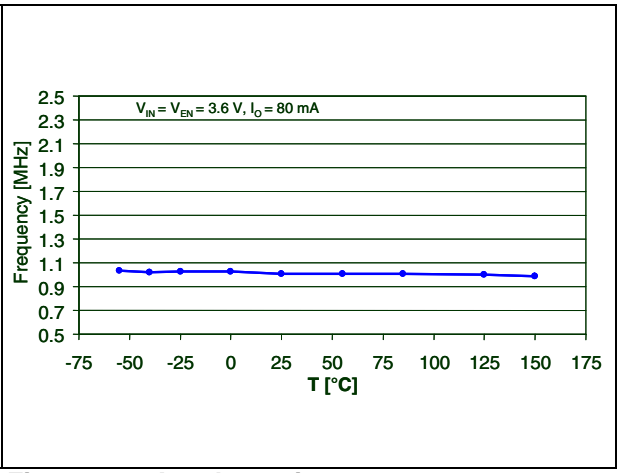

Figure 12. Line transient

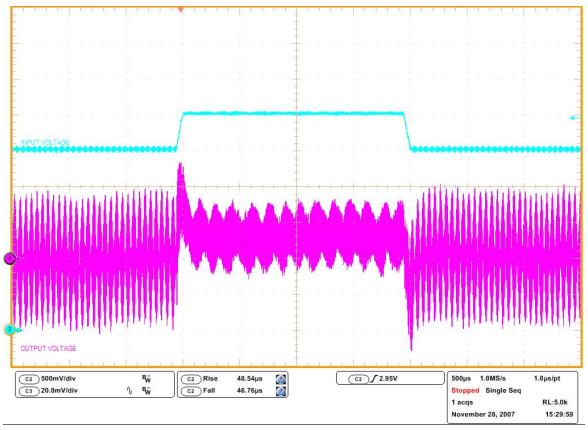

V_I = from 2.5 V to 3 V, I_O = 120 mA, V_I (t_{RISE} = t_{FALL}) = 50µs, T = 25 °C

Figure 13. Load transient response

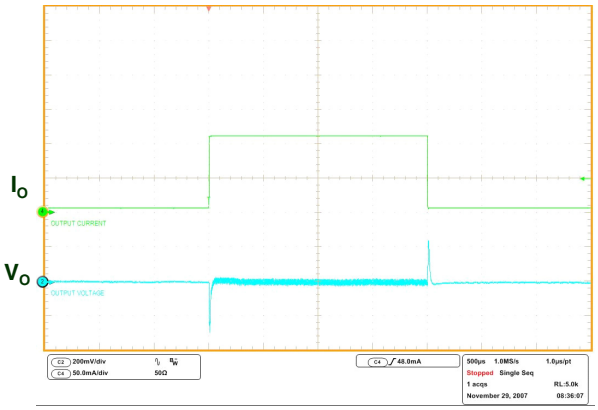

V_I = 3.6 V, I_O from 5mA to 120mA, t_{RISE} = t_{FALL} = 10 µs, T = 25 °C

Figure 14. TDMA noise

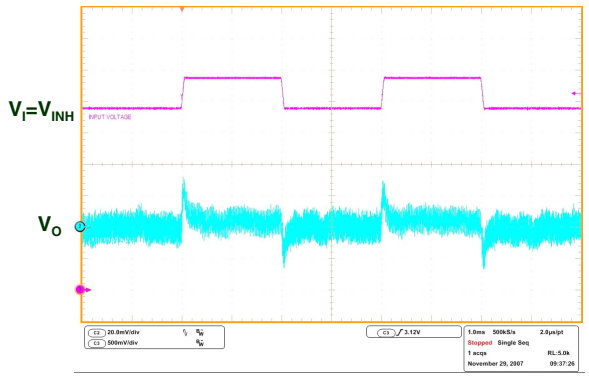

V_I = V_{INH} = from 2.9 V to 3.4 V, I_O = 120 mA,
V_I (t_{RISE}) = 50 µs, T = 25 °C

9 Package mechanical data

In order to meet environmental requirements, ST offers these devices in ECOPACK® packages. These packages have a lead-free second level interconnect. The category of second Level Interconnect is marked on the package and on the inner box label, in compliance with JEDEC Standard JESD97. The maximum ratings related to soldering conditions are also marked on the inner box label. ECOPACK is an ST trademark. ECOPACK specifications are available at: www.st.com.

Figure 15. DFN10L package outline

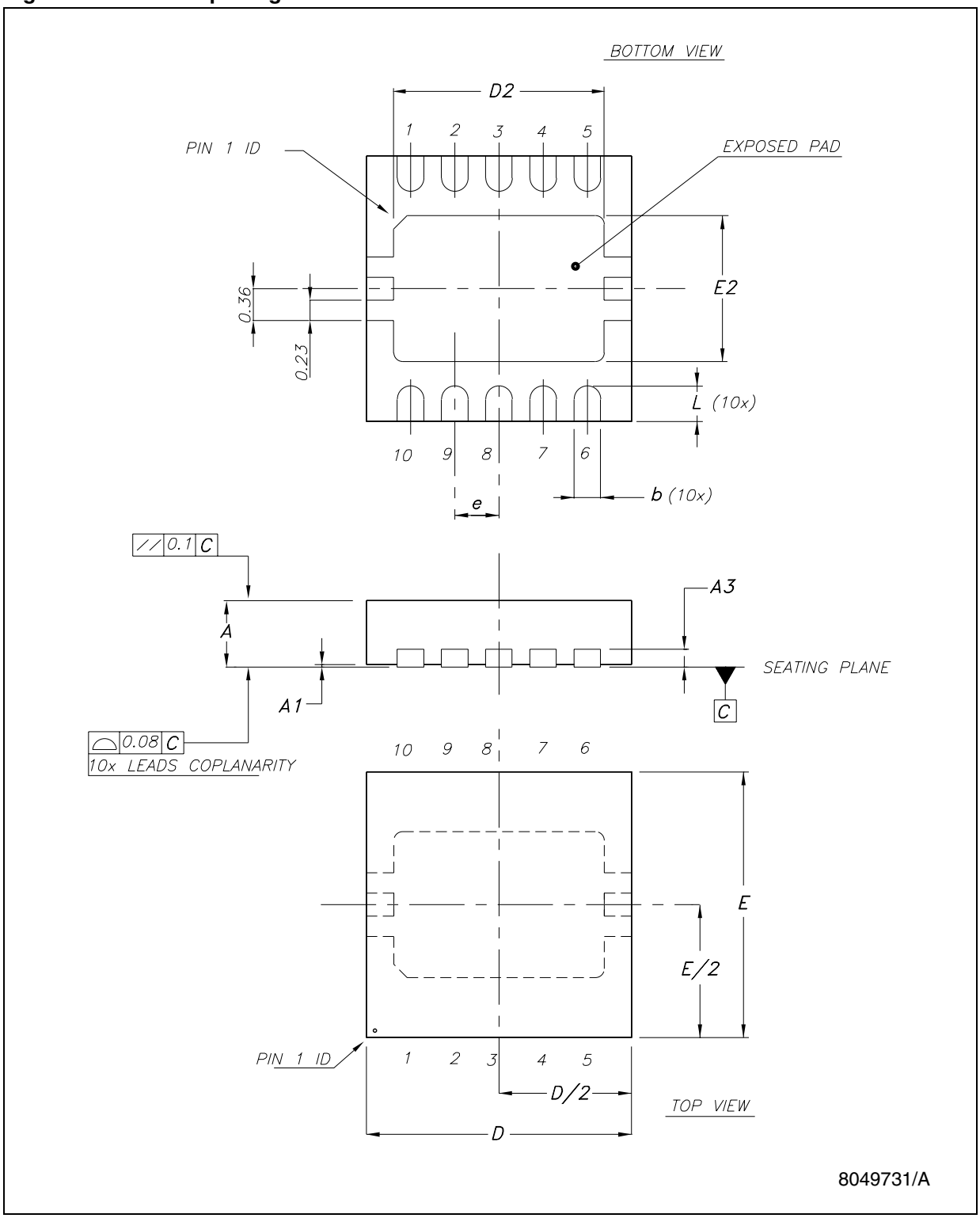

Table 8. DFN10L mechanical data

Dim.	mm.			inch.		
	Min.	Typ.	Max.	Min.	Typ.	Max.
A	0.70	0.75	0.80	0.028	0.030	0.031
A1	0	0.02	0.05	0	0.001	0.002
A3		0.20			0.008	
b	0.18	0.25	0.30	0.007	0.010	0.012
D	2.90	3	3.10	0.114	0.118	0.122
D2	2.23	2.38	2.48	0.088	0.094	0.098
E	2.90	3	3.10	0.114	0.118	0.122
E2	1.49	1.64	1.74	0.059	0.065	0.069
e		0.50			0.020	
L	0.30	0.40	0.50	0.012	0.016	0.020

Tape & reel QFNxx/DFNxx (3x3) mechanical data

Dim.	mm.			inch.		
	Min.	Typ.	Max.	Min.	Typ.	Max.
A			180			7.087
C	12.8		13.2	0.504		0.519
D	20.2			0.795		
N	60			2.362		
T			14.4			0.567
Ao		3.3			0.130	
Bo		3.3			0.130	
Ko		1.1			0.043	
Po		4			0.157	
P		8			0.315	

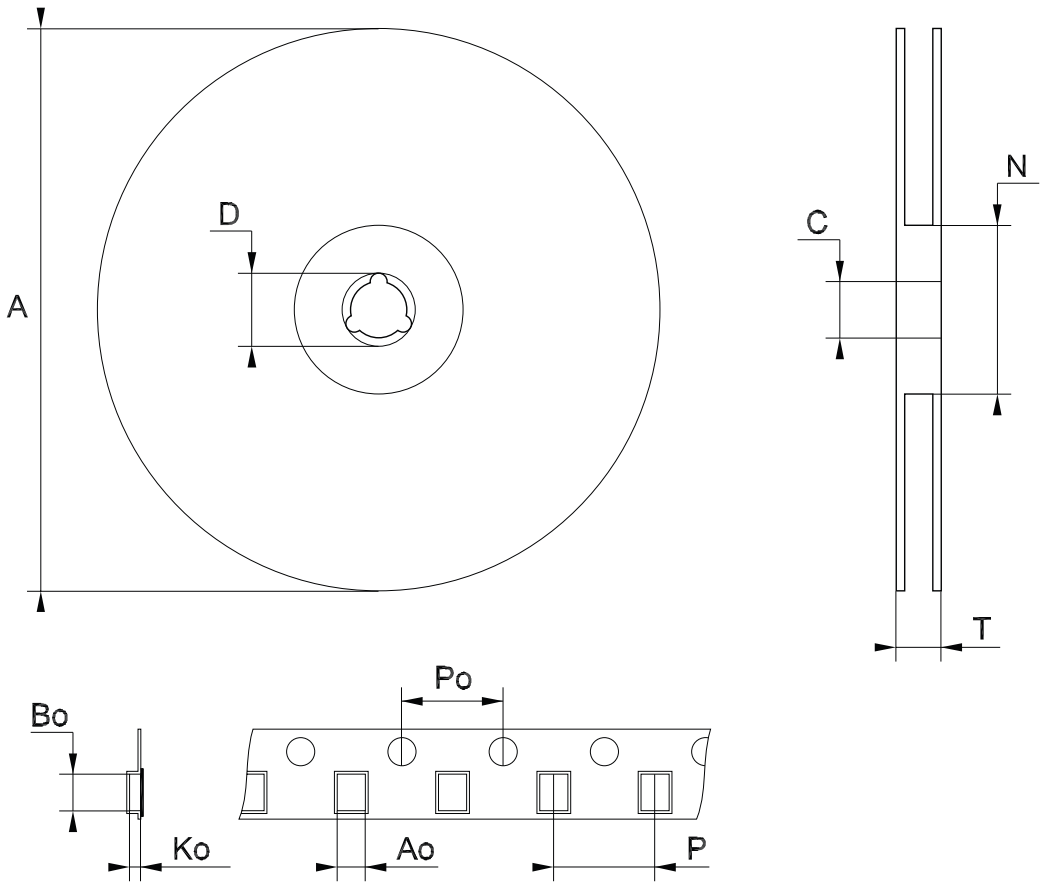

Note: Drawing not in scale

Figure 16. DFN10L footprint - recommended data

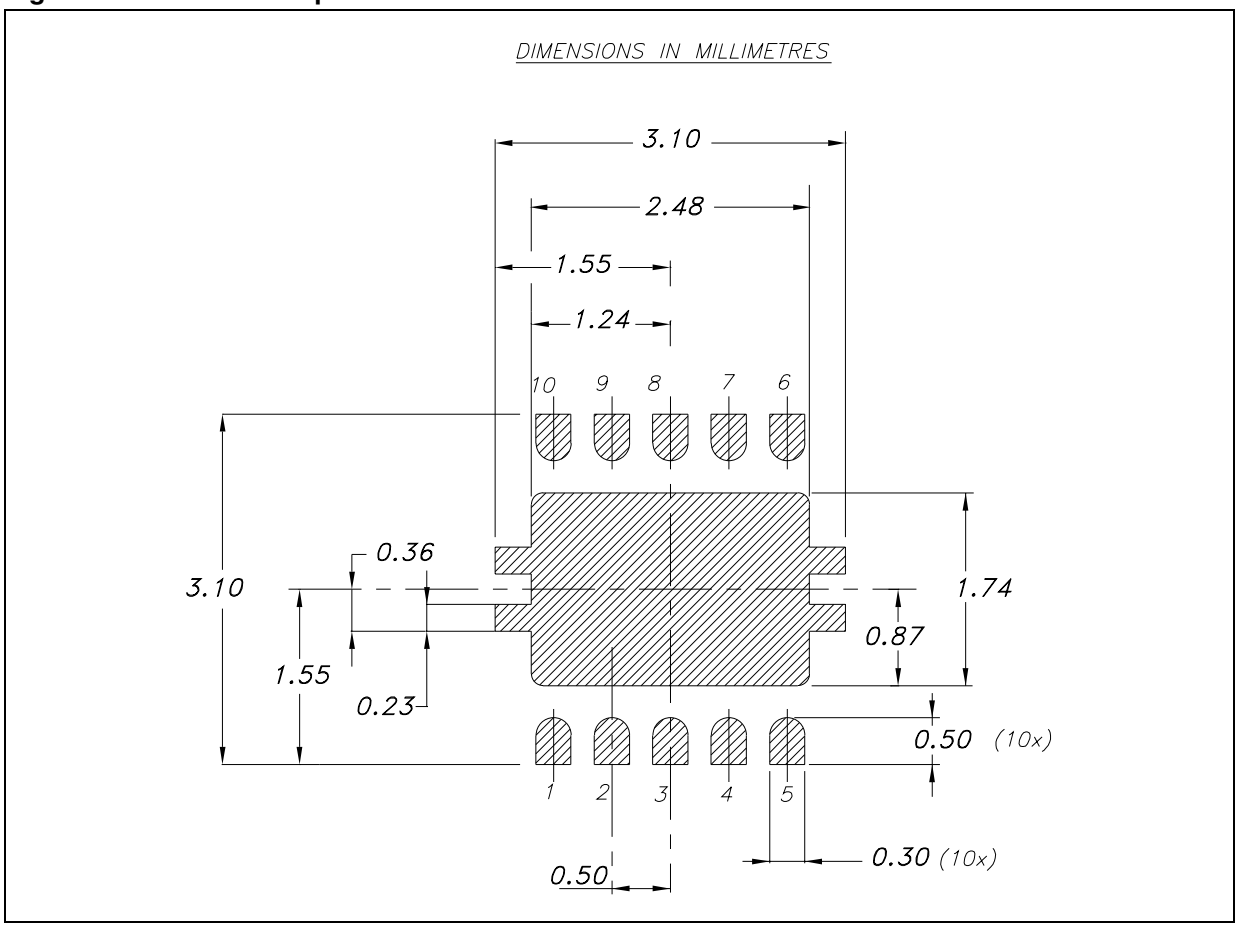

10 Revision history

Table 9. Document revision history

Date	Revision	Changes
25-Mar-2008	1	Initial release.

Please Read Carefully:

Information in this document is provided solely in connection with ST products. STMicroelectronics NV and its subsidiaries (“ST”) reserve the right to make changes, corrections, modifications or improvements, to this document, and the products and services described herein at any time, without notice.

All ST products are sold pursuant to ST’s terms and conditions of sale.

Purchasers are solely responsible for the choice, selection and use of the ST products and services described herein, and ST assumes no liability whatsoever relating to the choice, selection or use of the ST products and services described herein.

No license, express or implied, by estoppel or otherwise, to any intellectual property rights is granted under this document. If any part of this document refers to any third party products or services it shall not be deemed a license grant by ST for the use of such third party products or services, or any intellectual property contained therein or considered as a warranty covering the use in any manner whatsoever of such third party products or services or any intellectual property contained therein.

UNLESS OTHERWISE SET FORTH IN ST’S TERMS AND CONDITIONS OF SALE ST DISCLAIMS ANY EXPRESS OR IMPLIED WARRANTY WITH RESPECT TO THE USE AND/OR SALE OF ST PRODUCTS INCLUDING WITHOUT LIMITATION IMPLIED WARRANTIES OF MERCHANTABILITY, FITNESS FOR A PARTICULAR PURPOSE (AND THEIR EQUIVALENTS UNDER THE LAWS OF ANY JURISDICTION), OR INFRINGEMENT OF ANY PATENT, COPYRIGHT OR OTHER INTELLECTUAL PROPERTY RIGHT.

UNLESS EXPRESSLY APPROVED IN WRITING BY AN AUTHORIZED ST REPRESENTATIVE, ST PRODUCTS ARE NOT RECOMMENDED, AUTHORIZED OR WARRANTED FOR USE IN MILITARY, AIR CRAFT, SPACE, LIFE SAVING, OR LIFE SUSTAINING APPLICATIONS, NOR IN PRODUCTS OR SYSTEMS WHERE FAILURE OR MALFUNCTION MAY RESULT IN PERSONAL INJURY, DEATH, OR SEVERE PROPERTY OR ENVIRONMENTAL DAMAGE. ST PRODUCTS WHICH ARE NOT SPECIFIED AS "AUTOMOTIVE GRADE" MAY ONLY BE USED IN AUTOMOTIVE APPLICATIONS AT USER’S OWN RISK.

Resale of ST products with provisions different from the statements and/or technical features set forth in this document shall immediately void any warranty granted by ST for the ST product or service described herein and shall not create or extend in any manner whatsoever, any liability of ST.

ST and the ST logo are trademarks or registered trademarks of ST in various countries.

Information in this document supersedes and replaces all information previously supplied.

The ST logo is a registered trademark of STMicroelectronics. All other names are the property of their respective owners.

© 2008 STMicroelectronics - All rights reserved

STMicroelectronics group of companies

Australia - Belgium - Brazil - Canada - China - Czech Republic - Finland - France - Germany - Hong Kong - India - Israel - Italy - Japan - Malaysia - Malta - Morocco - Singapore - Spain - Sweden - Switzerland - United Kingdom - United States of America

www.st.com